Registered by Australian Pos
Publication No. SBG0711

Ye Zee News

Issue #8
February 1985

Return Address
30 Seventh Ave.
Cheltenham S.A. 5014

Welcome to issue #8. Well rumors abound about the VZ 200. First, D.S.E. was advertising the VZ for $79 in the S.A. press this month and rumor has it that the VZ 200 is a discontinued item. Second, the disc controller is in stock with the "Laser" name on it. No sign of the drives but rumor has it that the controller is not compatable with cheap drives, you have to buy the D.S.E drive. Third, a VZ 300 is about to be marketed, it will be software compatable with the 200 but I don't know about the hardware.
Anyway, it looks like a lively time is in stall for we "VZ users" and perhaps some decision making on sticking to the 200 or upgrading to the 300.

I am running short of programs for Ve Zee News, so how about it out there, any "works of art" or otherwise to contribute.

Happy Computing.

```
001 ; ** SOUND DEMO **
002 ; WRITTEN BY A.STEPHENS
003 ;
004 ;THIS ROUTINE IS A DEMO OF
005 ;THE ACTUAL SOUND
006 ;CAPABILITIES OF THE VZ-200
007 ;
008 ;NOTE: THIS PROGRAM WILL
009 ;ONLY RUN IN THE EDITOR
010 ;ASSEMBLER.
011       LD   BC,255
012       LD   HL,300
013 LOOP  DEC  HL
014       PUSH HL
015       PUSH BC
016       LD   BC,08
017       CALL 345CH
018       POP  BC
019       POP  HL
020       DJNZ LOOP
021       JP   7800H
```

Some notes from DAVE BOYCE

-A'FIX IT UP' - in Newsletter No5
1 On the MEMORY EXTENSION Diagram on the Right hand side.
A NOTE reads "Tie all unused Inputs on 74LS04 to high (+5V)"
This Should read "TIE all unused Inputs on the 74LS04 to LOW/GND (0V)"

Next 'FIX IT UP ' - in Newsletter No5
2 In relation to the ' HEX CONSTANTS 'LISTING, did you find that you lost about 8K of usable RAM (unless you POKED above the 44K mark as set in line 1)?
WELL - To get it back, change the following LINES as shown below

```
1 POKE 30897,8 : POKE 30898,207 : CLEAR 100
10 POKE 31125,9 : POKE 31126,207
15 LB=-12534
```

Reminder - once this program is entered and RUN, HEX entries can be made in DIRECT HEX .

NOW for a couple of Questions --
1 After reading a program book from the Library , I found some programs have .....
75 DEF FN A(X)= " (whatever) "
Quest . How do we 'DEF FN A(X)= ' on the VZ ??

2 Un sure what's happening her , BUT it's VIOLENT.
In the Immediate Mode .. enter 3 spaces & Shift/7 - press Return, now repeat. A bug in the ROMS or did Microsoft get something wrong. This has shown up in some Tandy machines as well .

3 Has anyone else made any Hardware Projects, if so , what ? --
we'd like to see what we are missing. GLUTONS for 'HACKING ' ar'nt WE.

UNDER ' TIPS ' in relation to ' DELETE ' on the front page of Newsletter No2
" DELETE n- " - Delete line 'n' to end of program..... this will not work without an endline number.

- refer JAN E.A. & E.T.I 1985

Dick Smith has dropped the price on the T.P. 40 PRINTER/PLOTTER to $99.00 he informed me when I was in there last that the price was correct and that the VZ-200 PRINTER/PLOTTER is down to $129.00 .
There is a new Software Package called -- 'MUSIC WRITER' -- For $12.50 it is very good value. Damn good Program.
The Keyboard used in the VZ-200 Keyboard Mod/upgrade in Newsletter No4 is now available from FORCE ELECTRONICS in ADELAIDE for $22.50 as against $29.95 about 6months ago,and that was not including $3.00 P & P from PERTH.

A few more TRICKS , hints
In Newsletter No2 - On the front page under VZ-TRICKS,in relation to 'SHIFT/7' being used for REM. Try taking out the Colon in Line 30 in both cases, so far , in programs I've written such as Line ------
100 L=L+1 ' adds one to loop
Note - no colon. even the space can be left out.
have not crashed, try it - it works

Following on -
A Space saver when using SOUND
Instead of line 150 SOUND15,1:SOUND15,5:SOUND20,2:SOUND20,1:SOUND20,3
Type in 150 SOUND15,1;15,5;20,2;20,1;20,3
This saves MEMORY & is EASIER to type in --- it works to.

Also
LIST.
NOTE the DOT - it's on the 'GREATER THAN'Key ,otherwise known as a 'full stop'.

LIST. will LIST the last LINE 'worked' on after 'breaking' a program.
Handy if you 'forget' which LINE it was.
LIST.-
LIST-. try these to.

They all work in a similar fashion with the LIST Command.
O.K. so much for DOTS.

In reference to Colin Hudsons T.P. 40 ,on the VZ P/P all that apears to be needed is OUT12,11 ... OUT13,Ø does not appear to be needed in all cas es

Paper Feed a few inches er sorry .. centimeters before Running this --

```
1 FOR L= 1 TO 1Ø ' 1Ø REVERSE LPRINTS
2 OUT 12,11
3 NEXT L
4 END
```

Note - no OUT 13,Ø

Software for sale from..... W. OBRIST
41 O'HARA ST
MARRICKVILLE NSW 2204

	24KRAM	3KRAM	
MONITOR/DEBUGGER 1.2	(M1.2)	(3M1.2)	$14.95
CMERGE/DELETE/RENUMBER 2.0	(MDR3)	(3MDR3)	$12.50
PROTECT 2.0	(PT2)	(3PT2)	$14.95
EXTENDED BASIC 1.0	(EB1)	(3EB1)	$12.50
ARRAY UTILITY/RESTORE N (EXTENDED BASIC NEEDED)	(AR1)	(3AR1)	$14.95
MAGIC EPROM (EB1/AR1/MDR3 IN EPROM 4000-4FFF) (2732 OR 2532 AVAILABLE)			$47.50

LOAD TRS30/SYSTEM80 BASIC TAPES F R E E WITH ANY PRUCHASE.

ALL PRICES INCLUDE POSTAGE/PACKAGE. (SEND POSTAL ORDER FOR SPEEDY SERVICE). NOTE THAT SPECIAL RAM-SIZES ARE AVAILABLE FOR A SURCHARGE OF $5.00 .

For Sale

TP 40 printer/plotter with interface, $100. Contact Bruce Curtis (08) 2541583

Compumuse music synthesiser, see elsewhere in this issue, $30. Contact Dave Boyce (08) 3846574

Software from W OBrist

The following are brief descriptions of some of the software available from W OBrist. I have not had time yet to fully evaluate them all but what I have tried looks good. In the next few issues I will review the software, as I become more familiar with it.

Anyone else out there who has software for sale let me know so I can advertise it for you.

ARRAY-UTILITY

THIS POWERFULL UTILITY CAN DUMP 800 RECORDS OF 16 CHARACTERS IN LESS THAN 4 MINUTES ONTO TAPE. IT
IS LOCATED AT CCD4-CFFFH (812 BYTES). IT CAN BE LOADED AT ANY TIME WITHOUT DESTROING A BAISC PROGRAM OR THE EB-UTILITY EVEN IF THE M/D/R UTILITY WAS USED BEFORE. WITH THIS ARRAY UTILITY YOU CAN SAVE OR LOAD WHOLE ARRAYS AT THE TAPE SPEED OF 600 BAUD, REGARDLESS OF THE LENGTH OR THE NUMBER OF DIMENSIONS. RESTORE N ENABLES YOU TO MOVE THE DATA POINTER FOR THE READ COMMAND TO THE FIRST ELEMENT OF ANY DATA LINE IN YOUR PROGRAM.
IMPORTANT:
THIS UTILITY WILL ONLY RUN IF THE BASIC PROGRAM WAS WRITTEN BY AN EXTENDED BASIC WHICH ACCEPTS THE DISK COMMANDS LOAD, SAVE, KILL AND NAME.

READ XX80-FILES
==========

THIS VERY USEFULL UTILITY GIVES YOU ACCESS TO ALL TRS80 AND SYSTEM80 SOFTWARE. IT LOADS ANY ..80-BASIC FILE INTO YOUR VZ-200.

EXTENDED BASIC,

IS LOCATED AT C9D2-CC63H (658 BYTES), THE SPACE LEFT IS NEEDED FOR THE MERGE OR ARRAY UTILITY. BOTH ARE WORKING WITH THE EXTENDED BASIC AND MAY BE LOADED AT ANY TIME AS NEEDED, WITHOUT DESTROING A BASIC PROGRAM. ALL 45 MISSING TRS-80 LEVEL 2 KEYWORDS ARE TRANSLATED INTO THEIR TOKENS AND ARE LISTABLE AT ANY TIME. THIS GIVES YOU 19 ADDITIONAL BASIC COMMANDS/FUNCTIONS AND ALL THE DISK COMMAND EXITS WHICH ARE VERY HANDY TO LINK ANY M/L PROGRAMS. NOTE THAT BASIC PROGRAMS WRITTEN WITH THAT UTILITY ARE RUNNING WITHOUT IT EVEN, IF COMMANDS/FUNCTIONS FROM THE LIST BELOW ARE USED.

ADDITIONAL COMMANDS/FUNCTIONS:
POS-FRE(X$)-MEM-ERR-ERL-FIX-CDBL-CSNG-CINT-ON-AUTO-DEFINT-DEFSNG-DEFDBL-DELETE-RANDOM-VARPTR-STRING$-RESUME

DISK COMMANDS/FUNCTIONS:
LOF-LOC-EOF-CVD-CVS-CVI-DEF-PUT-GET-MKD$-MKS$-MKI$-TIME$-CMD-FN-LSET-RSET-OPEN-CLOSE-LOAD-SAVE-KILL-NAME-MERGE-FIELD-INSTR

© February 1985

All material in Ve Zee News is subject to copyright. Contributed programs are reproduced with permission and on the understanding that they are for private use of subscibers only. Copyright is retained by the authors.

```
 1 REM "MUGWUMP"
2 REM "CREATIVE COMPUTING"
3 REM "MODIFIED FOR VZ200"
4 REM "BY R. CARSON"
10 CLS
20 PRINT:PRINT"            MUGWUMP"
22 PRINT:PRINT:PRINT"      CREATIVE COMPUTING"
23 PRINT"           FOR VZ 200"
24 PRINT"          BY R. CARSON"
25 PRINT"            ADELAIDE":PRINT:PRINT
30 INPUT"PLEASE TELL ME YOUR FIRST NAME"  ;NAM$
35 PRINT@320,"                                                  ";
37 PRINT"                  "
40 PRINT"G'DAY ";NAM$:PRINT"I'M PLEASED TO MEET YOU!"
60 FORI=1 TO 2500:NEXTI
70 CLS
80 PRINT:PRINT:PRINT
90 DIM P(4,2)
100 PRINT"THE OBJECT OF THE GAME IS TO    FIND 4 MUGWUMPS ";
110 PRINT"HIDDEN ON A     10X10 GRID.":PRINT
111 PRINT"HOMEBASE IS POSITION 0,0."
112 PRINT:PRINT:PRINT:PRINT:PRINT"PRESS SPACE TO CONTINUE:-"
113 K$=INKEY$
114 I$=INKEY$:IFI$<>" "THEN113
120 PRINT"ANY GUESS THAT YOU MAKE MUST BE 2 NUMBERS WITH EACH ";
130 PRINT"NUMBER      BETWEEN 0 AND 9,INCLUSIVE. FIRSTNUMBER ";
140 PRINT"IS DISTANCE TO RIGHT OF  HOMEBASE AND SECOND NUMBER";
150 PRINT" IS   DISTANCE ABOVE HOMEBASE. ENTER  THE TWO NUMBERS";
160 PRINT" SEPERATED BY A  COMMA."
170 PRINT
180 PRINT"YOU GET 10 TRYS. AFTER EACH TRY,I WILL TELL ";
190 PRINT"YOU HOW FAR YOU ARE FROM EACH MUGWUMP."
200 PRINT
210 PRINT"PRESS SPACE TO BEGIN---                    >>GOOD LUCK<<"
220 A$=INKEY$
222 I$=INKEY$:IFI$<>" "THEN220
230 CLS
240 GOSUB 620
250 T=0
260 T=T+1
270 PRINT
275 PRINT"--------------------------------";
280 PRINT" TURN NO.";T
285 PRINT:PRINT" -WHAT IS YOUR GUESS";
290 INPUT M,N
300 CLS
310 PRINT
320 IFM<0ORM>9ORN<0ORN>9PRINT"ENTER NUMBERS 0 TO 9":PRINT:GOTO280
330 FOR I=1 TO 4
340 IF P(I,1)=-1 THEN 420
350 IF P(I,1)<>M THEN 400
360 IF P(I,2)<>N THEN 400
370 P(I,1)=-1
375 PRINT NAM$:PRINT" YOU'VE FOUND MUGWUMP ";I:PRINT
390 GOTO 420
400 D=SQR((P(I,1)-M)^2+(P(I,2)-N)^2)
410 PRINT"YOU'RE ";:PRINTUSING"##.#";(INT(D*10))/10;
415 PRINT" UNITS FROM MUGWUMP";I
420 NEXT I
430 FOR J=1 TO 4
440 IF P(J,1)<>-1 THEN 490
450 NEXT J
460 PRINT
468 PRINT"WELL ";NAM$
475 IF T<8 THEN PRINT"AREN'T YOU THE EXPERT"
477 PRINT"YOU GOT THEM ALL IN";T;"TURNS!":PRINT
480 GOTO 560
490 IF T<10 THEN 260
492 PRINT:PRINT:PRINT"  PRESS >>SPACE<< FOR RESULTS"
495 K$=INKEY$
497 I$=INKEY$:IFI$<>" "THEN495
510 CLS:PRINT:PRINT"SORRY ";NAM$","
512 PRINT"THAT'S TEN TRIES."
515 PRINT:PRINT"HERE IS WHERE THEY'RE HIDING:-"
520 PRINT:FOR I=1 TO 4
530 IF P(I,1)=-1 THEN 550
540 PRINT "MUGWUMP";I;"IS AT (";P(I,1);",";P(I,2);")"
550 NEXT I
560 PRINT:PRINT:PRINT"   DO YOU WANT TO  PLAY AGAIN"
570 PRINT"        (Y=YES    N=NO)":PRINT
580 K$=INKEY$
581 I$=INKEY$:IF I$=""THEN581
582 IF I$="Y"THEN590
583 IF I$="N"THENCLS:END
585 IF I$<>"Y"THEN 581
587 IF I$<>"N"THEN 581
590 CLS
600 PRINT:PRINT"FOUR MORE MUGWUMPS ARE NOW IN    HIDING.":PRINT
610 GOTO 240
620 FOR J=1 TO 2
630 FOR I=1 TO 4
640 P(I,J)=INT(RND(9))
650 NEXT I
660 NEXT J
670 RETURN
680 CLS:END
```

VZ 200- DOUBLE PRECISION & TRIG. FUNCTIONS

(John Calder)

This programme tabulates the results of the formulae Bx=B*CosA and Bx=B*Sina, where B is a distance (1234.5678) and A is a bearing in decimal degrees.

Three methods are used:

1. Multiplication
2. Division by reciprocals
3. Multiplication using the sub-routine given on page 10 of December Ve Zee News.

Conversion of bearings to radians is by division by the reciprocal of Pi/180 in 1 and 2 above, and by multiplication in 3. Correct results are listed after each series. It appears that all the results are accurate to at least three decimal places - (1 ppm) - but note that conversion to radians should be by reciprocal in 1 and 2, as this produces a more accurate result.

```
1!A-C POKE 31469,155
10 B=1234.5678
20 LPRINT"DISTANCE";B
30 INPUT"BEARING";A
40 LPRINT"BEARING";A
50 A1=A/57.295779513
60 B1=B*COS(A1)
70 B2=B/(1/COS(A1))
80 B3=B*SIN(A1)
90 B4=B/(1/SIN(A1))
100 LPRINT
105 GOSUB1000
110 B5=B
120 A2=A
130 C=0.017453293
140 C1=1
150 C2=1
160 A1= A2*C/C1
170 B6=B5*COS(A1)/C2
180 B7=B5*SIN(A1)/C2
200 LPRINT"COS*";B1
210 LPRINT"COS/";B2
220 LPRINT"SIN*";B3
230 LPRINT"SIN/";B4
240 LPRINT
250 LPRINT"COS";B6
260 LPRINT"SIN";B7
270 LPRINT
280 GOTO30
1000 IFA2=INT(A2)THEN2000
1010 A2=A2*10
1020 C1=C1*10
1030 GOTO1000
2000 IFC=INT(C)THEN3000
2010 C=C*10
2020 CI=C1*10
2030 GOTO2000
3000 IFB5=INT(B5)THENRETURN
3010 B5=B5*10
3020 C2=C2*10
3030 GOTO3000
```

Methods 1 and 2.

Method 3

Method 3

```
DISTANCE 1234.5678
BEARING 20

COS* 1160.114172596633
COS/ 1160.114144385862
SIN* 422.2470322856247
SIN/ 422.2470383693819

COS 1160.114172596633
SIN 422.2470322856247

 1160.114252
 422.2470559
BEARING 45.588889

COS* 863.9527719153643
COS/ 863.9527529233377
SIN* 881.8974478203535
SIN/ 881.8974613770275

COS 863.9527719153643
SIN 881.8974478203535

 863.9528679
 881.897440
BEARING 89.175

COS* 17.77598465603515
COS/ 17.77598396614794
SIN* 1234.439833989179
SIN/ 1234.43977368108

COS 17.77575240030102
SIN 1234.439760403204

 17.77588593
 1234.439821
BEARING 90.825

COS*-17.77598465603515
COS/-17.77598396614794
SIN* 1234.439833989179
SIN/ 1234.43977368108

COS-17.77598465603515
SIN 1234.439833989179

BEARING 269.298056

COS*-15.1246175829269
COS/-15.1246176307114
SIN*-1234.475155257261
SIN/-1234.475088634081

COS-15.12415537102036
SIN-1234.475155257261

-15.12460061
-1234.475151
```

THE COMPUMUSE MUSIC SYNTHESISER by DAVE COYCE

After looking for something more to add to the VZ for more interest in programs we find ELECTRONICS AUSTRALIA AUGUST 1983, pages 9Ø to 99&141 has the answer --- It ststes in the opening paragraph " The project is EASY to Build and simple to use. It will connect to any Computer with a Centronics-Style Parallel Port." Well now , the VZ has a Printer Interface that will drive this project quite well and without to much (very little) trouble.
A kit of parts is available from Altronics in Perth or from FORCE Electronics in Adelaide (Wright st) or FORCE at Christies Beach for $ 26.5Ø . Every part is included except for a case to mount the unit into and a connector to join the unit to the interface.
There are two program listings included in the kit Instructions to get you started, although a few mods to the Lists should be made.

The Software Mods.

LIST 1
Insert LINE 5 to read --- 5 GOSUB 9ØØ
In lines 22,24,26 and 3Ø I deleted 'TAB(15)' from each line.
Line 7Ø is not supported by the VZ but can be got around by using for instants--

```
7Ø  IF A= 1 THEN 1ØØ
75  IF A= 2 THEN 5ØØ
8Ø  IF A= 3 THEN 8ØØ
```

Johns' Invisable Commands routine could also be used.
Change Lines 45Ø , 71Ø , 9Ø4 and 91Ø to read 'N= 14 ' or what ever Port No. you are using. The VZ uses Port 14.

LIST 2 Mods.
Lines 3Ø and 1Ø1Ø should read 3Ø N= 14
1Ø1Ø N= 14

Line 6Ø is also not supported by the VZ, but can be modified in the same manner as line 7Ø in List 1.

The HARDWARE MODS.

Instead of mounting the Preset Pot (VR1) on the P.C.Board , I used a 1Økn Linear Panel Mount Pot on the case which houses a 7"x 5" speaker along with a switch to change X'TAL Frequency . Because of the LM386's low output, do not use too large a speaker. I've used a 15 Way D.B Plug and backshell (recommended) on the cable from the Compumuse to connect into the 15 Way D.B. Sockett that I mounted on the Printer Interface. The appropiate signals are picked up from the Interface P.C.B. where the 14 Way header is solderd in. The 5 Volt regulator is not mounted on my Compumuse P.C.B as the 5 Volt supply is picked up from the Interface on Pins 4 & 19 of EDGE Connector. Ø Volts can be picked up from PINS 15 & 3Ø of the EDGE Connector. Seediagrams. Note -- If using the Printer Interface in this way - DO NOT HAVE THE PRINTER CONNECTED AT THE SAME TIME. Garbage will result on the Printer when outputting to the Compumuse.
NOTE ALSO -- This Project is probably under Copywright, but I can help if you get stuck. YOU MUST USE THE 5 Volt REGULATOR if using a 9 Volt power supply
Because the Circuit diagram is under (probably) Copywright, I can't reproduce the complete diagram, but I don't think a small section would hurt. A switch can be connected as shown to select the X'TAL frequency.
IF all else fails -- help is at hand.

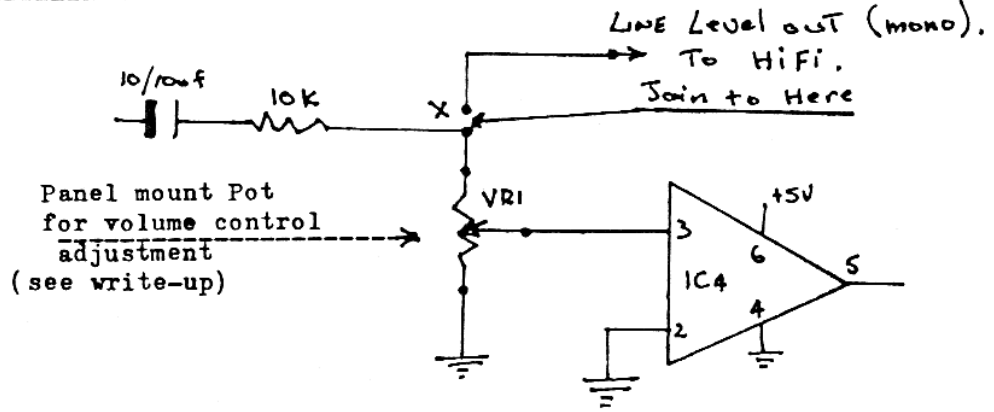

Part of amplifier circuit showing where (at 'X') to take
The Signal to your HiFi.

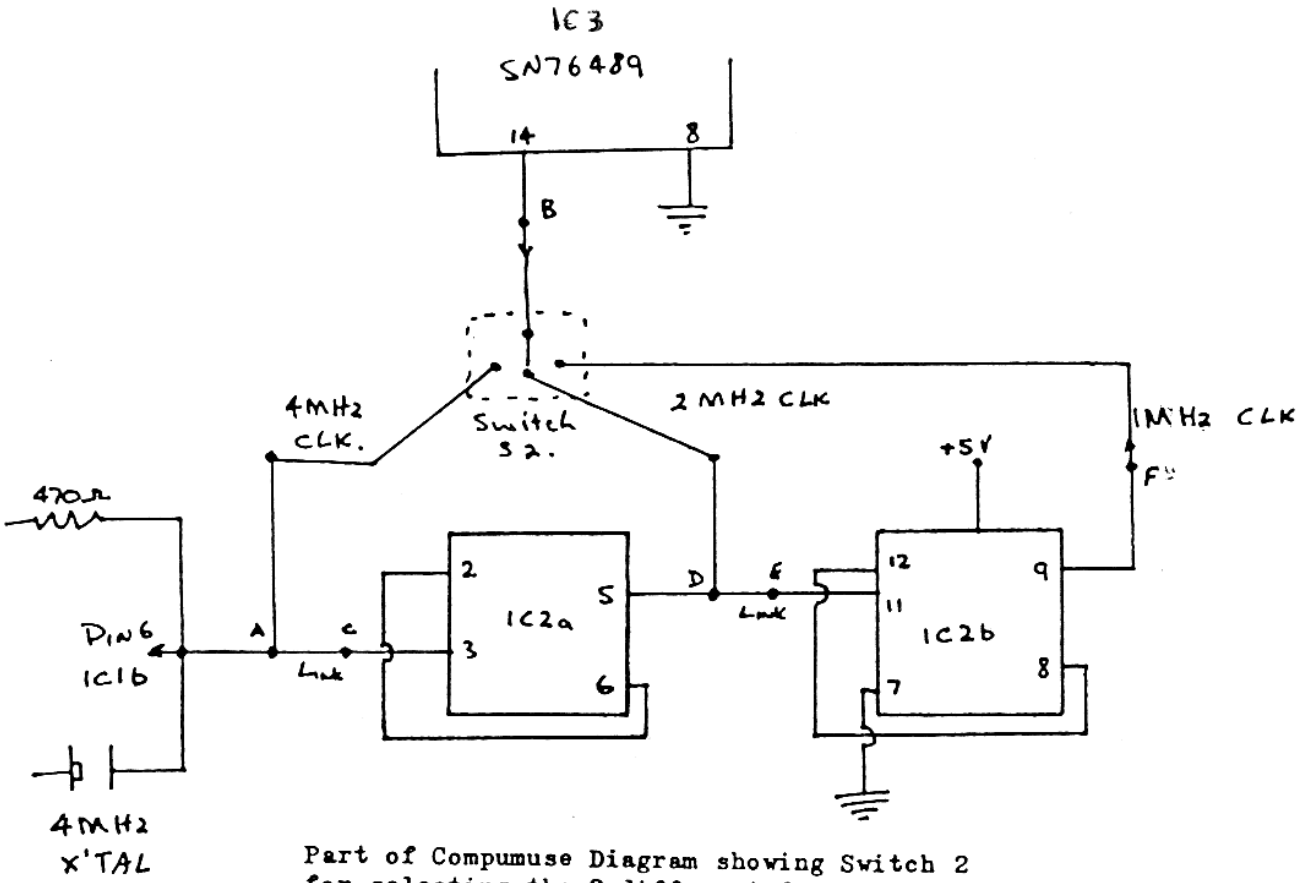

Part of Compumuse Diagram showing Switch 2 for selecting the 3 different frequencies. Don't forget the links 'a-c' and 'd-e' see instructions.

VZ = 200 I/O BUFFER

This buffer is designed to buffer the data, address and control lines from the VZ-200. It is meant to connect to the peripheral port and does not affect the use of the expansion port (it does not buffer it either).

The buffer is enabled only if an OUT or IN command is given.

Breifly - if an OUT command is given - pin 4(1A) goes low - IORQ goes low which takes pin 5(1B) low and in turn 6(1B) goes high, pin 1(IC2) now goes high and is enabled. Data will be latched to any device that is attached to the port.

When an IN command is given - pin 4(1B) is high, pin 5 is low - this makes pin 6(1B) high and changes the direction of IC2 - so that data is now read from anything attached to the buffer.

If a memory operation is in progress, then the buffer data lines are tristated due to pin 19(IC2) being high.

The address and control line buffers are configured as OUT only and therefore do not need tristating. The rest of the circuit is fairly straightforward and gives provision for different decoding schemes.

A 24 pin dipheader and socket would be a convenient and cheap method of attaching any other device to the buffer the input of course requires a 30 way(.1) card edge connector (you can change it, as I did) to a socket on the CPU board, this solves some problems but may create new ones.

VZ-200 BUFFER-I/O
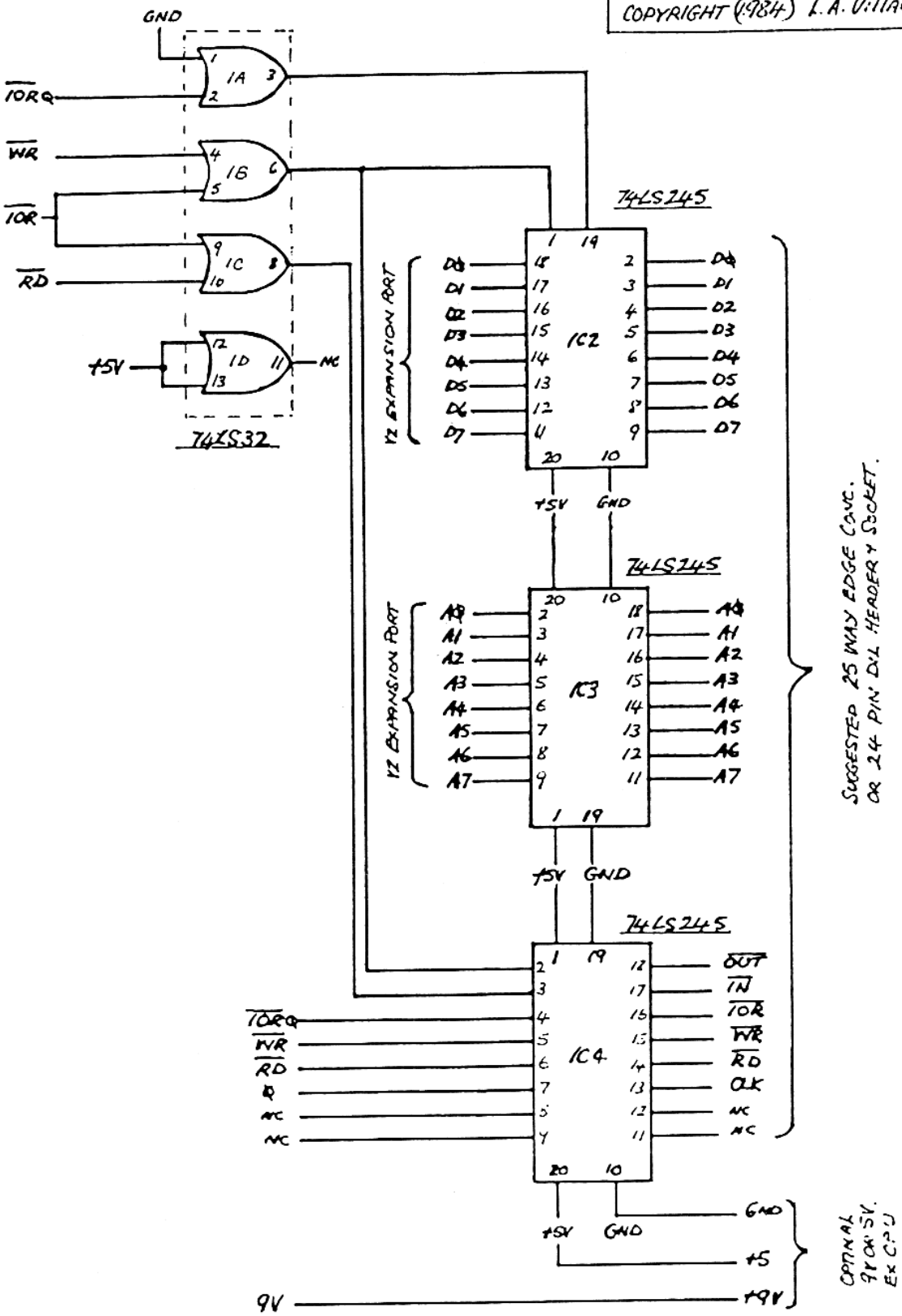
COPYRIGHT (1984) L.A. VILLANI.